rond

retrofit socket type G
installation instruction

1

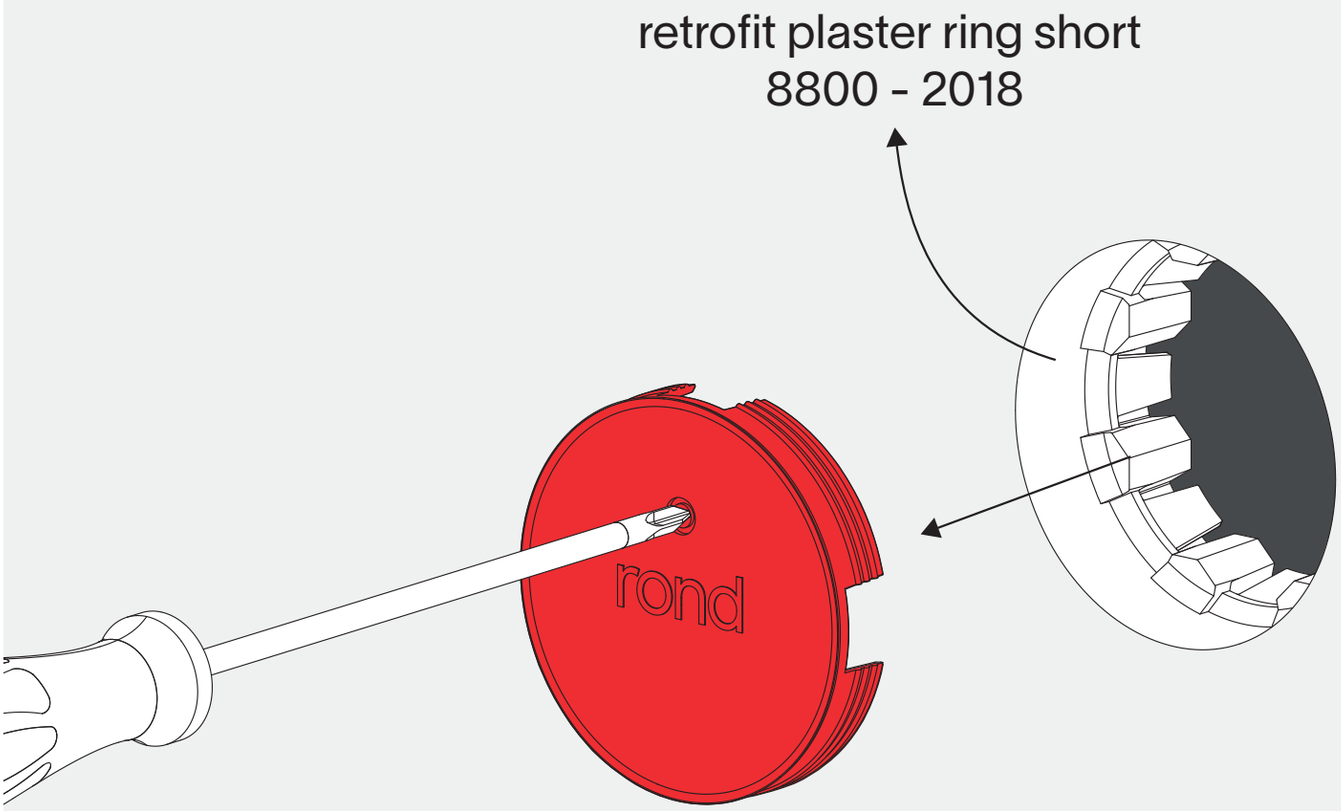

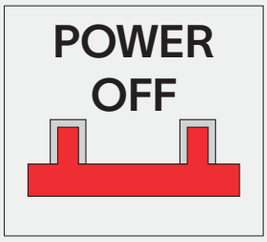

2

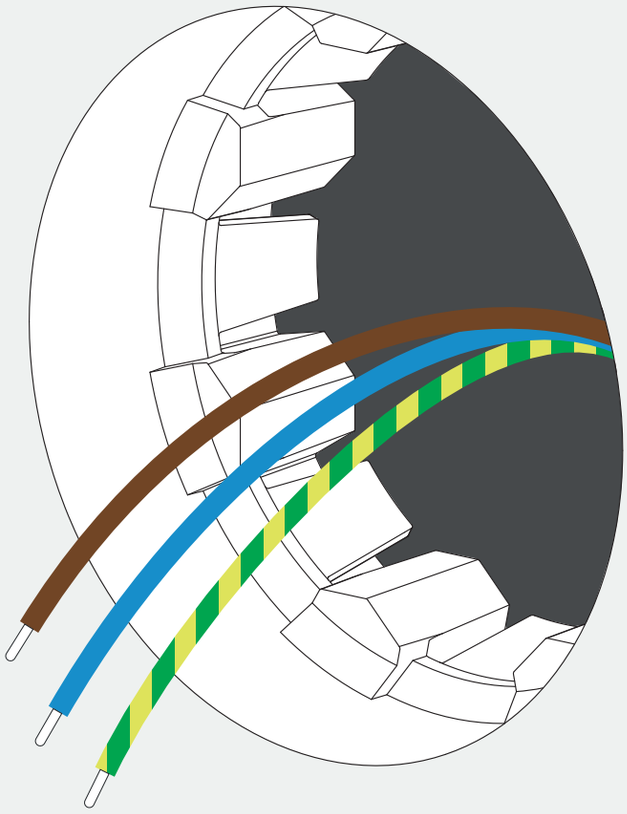

3

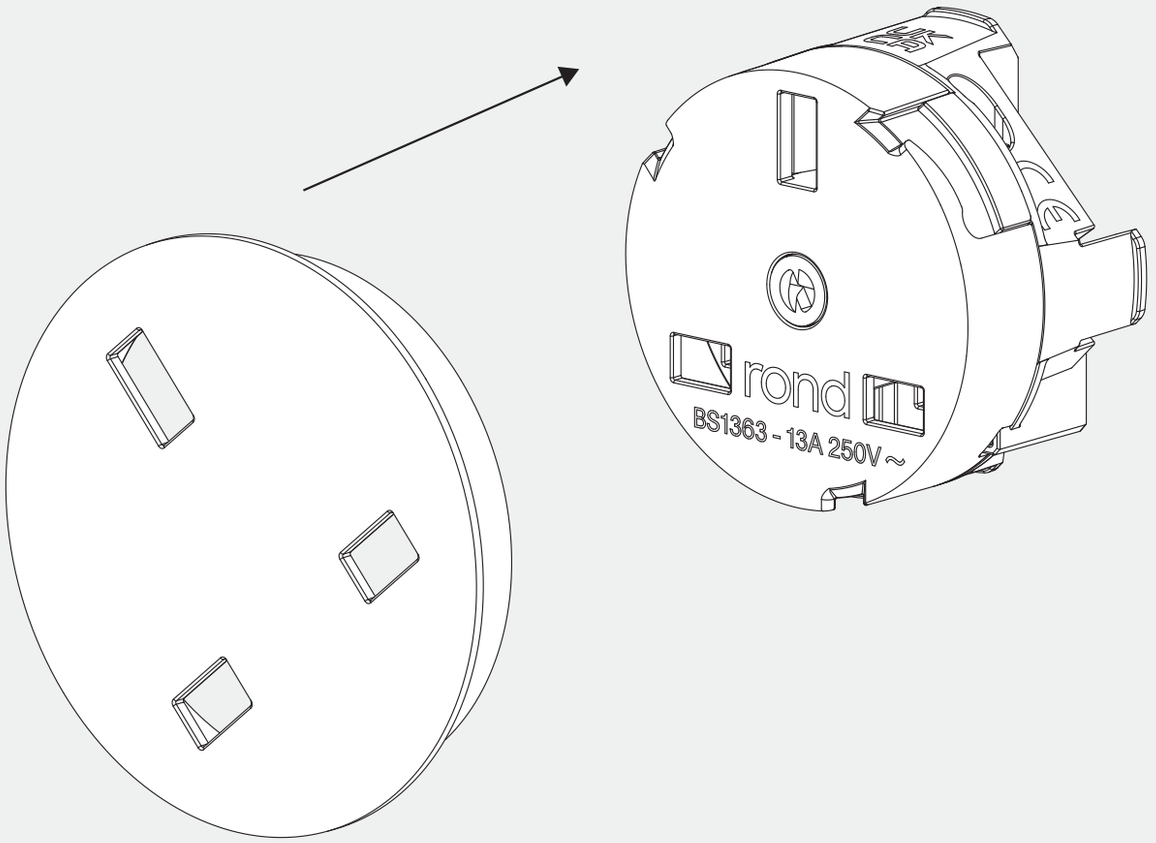

cover type	finish	SKU

trimless (Ø48)	white	8800-5033
	cream	8800-5034
	black	8800-5035
small trim (Ø52)	white	8800-5036
	cream	8800-5037
	black	8800-5038

4

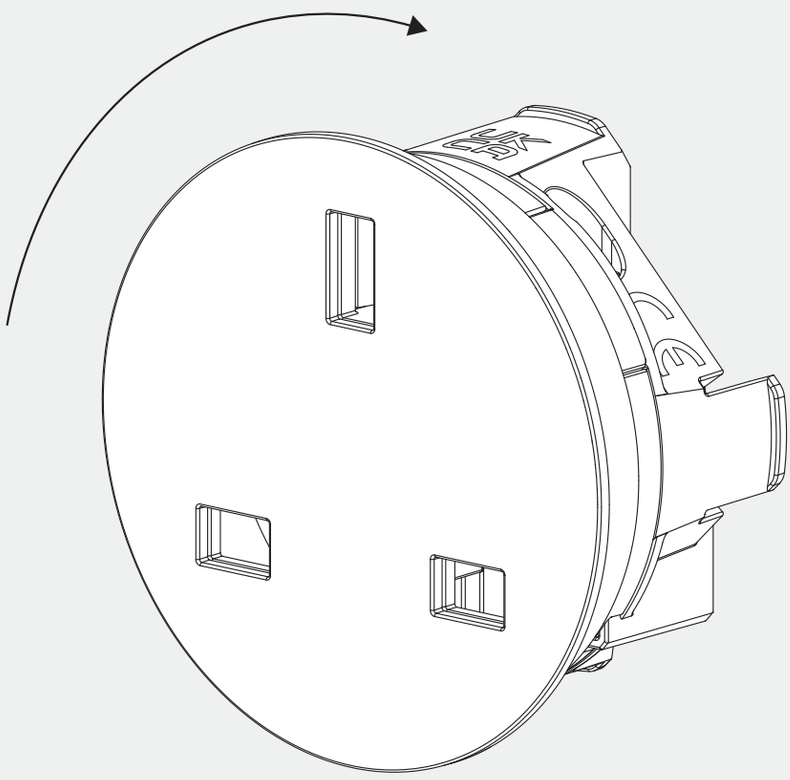

5

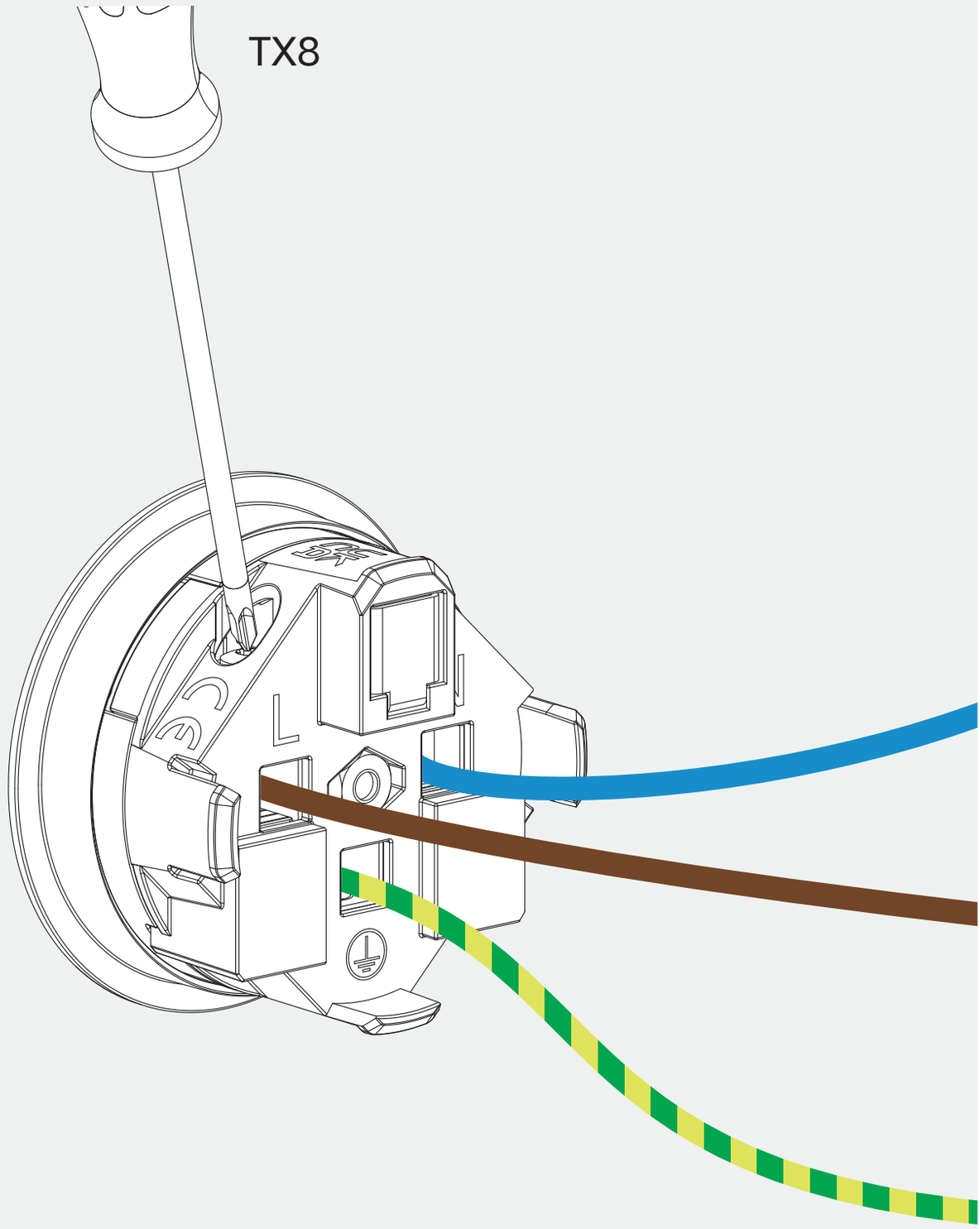

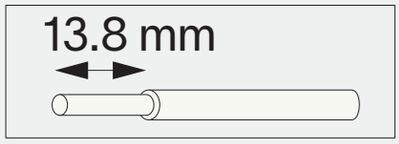

6

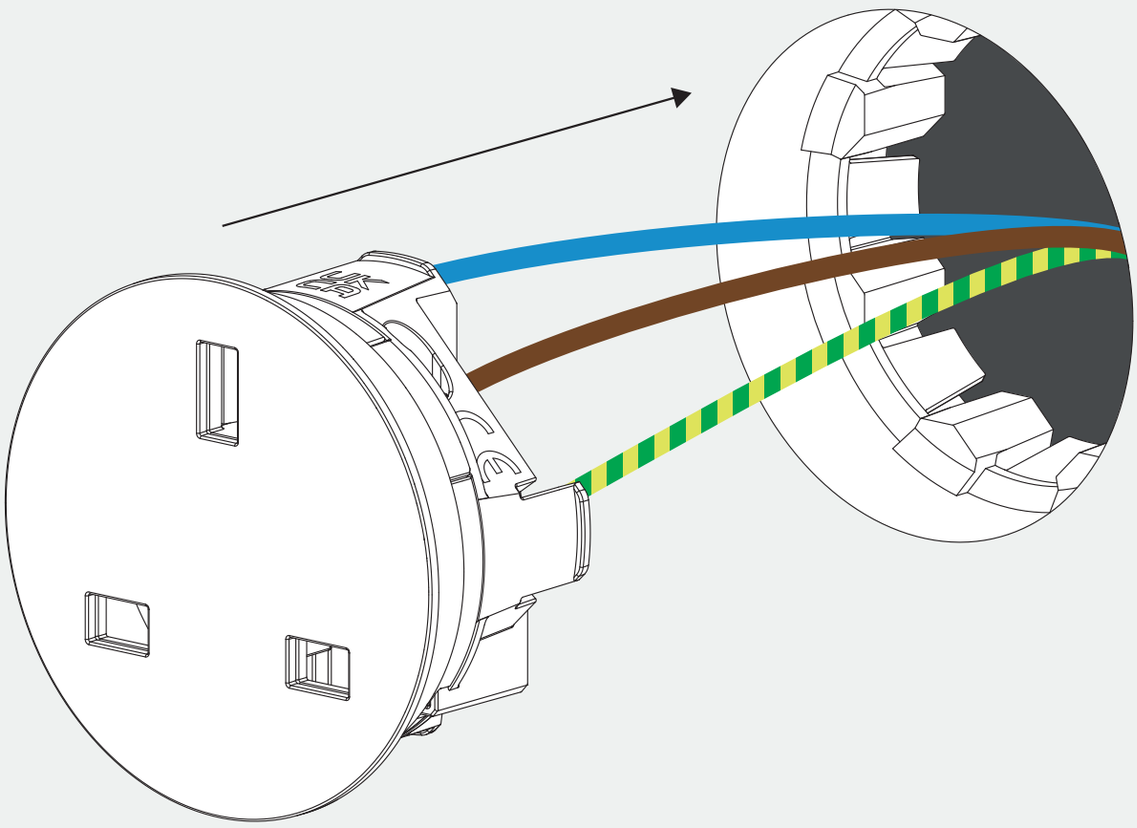

7

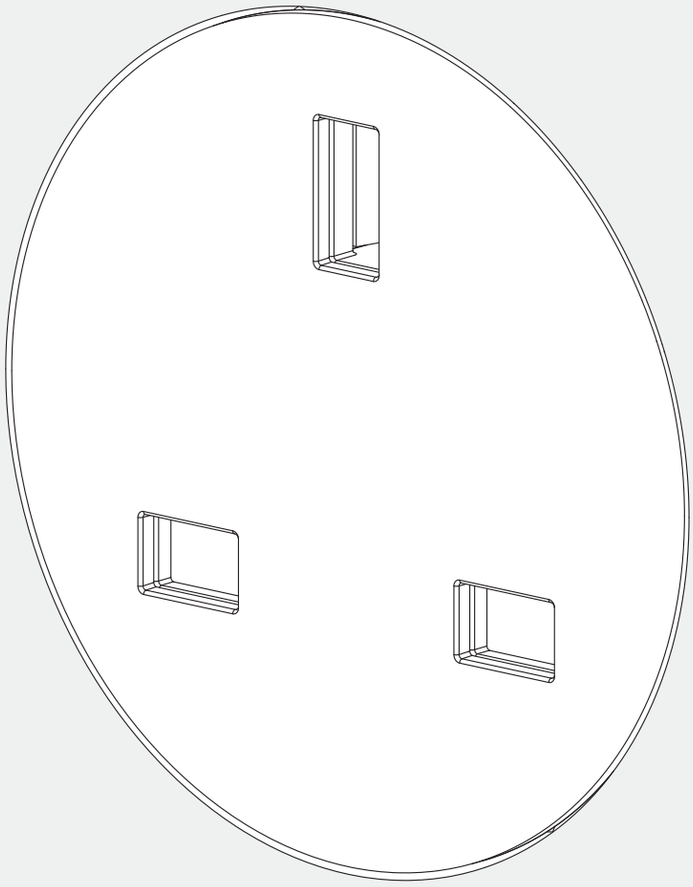

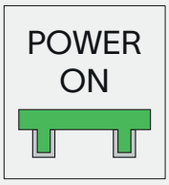

for removal

1

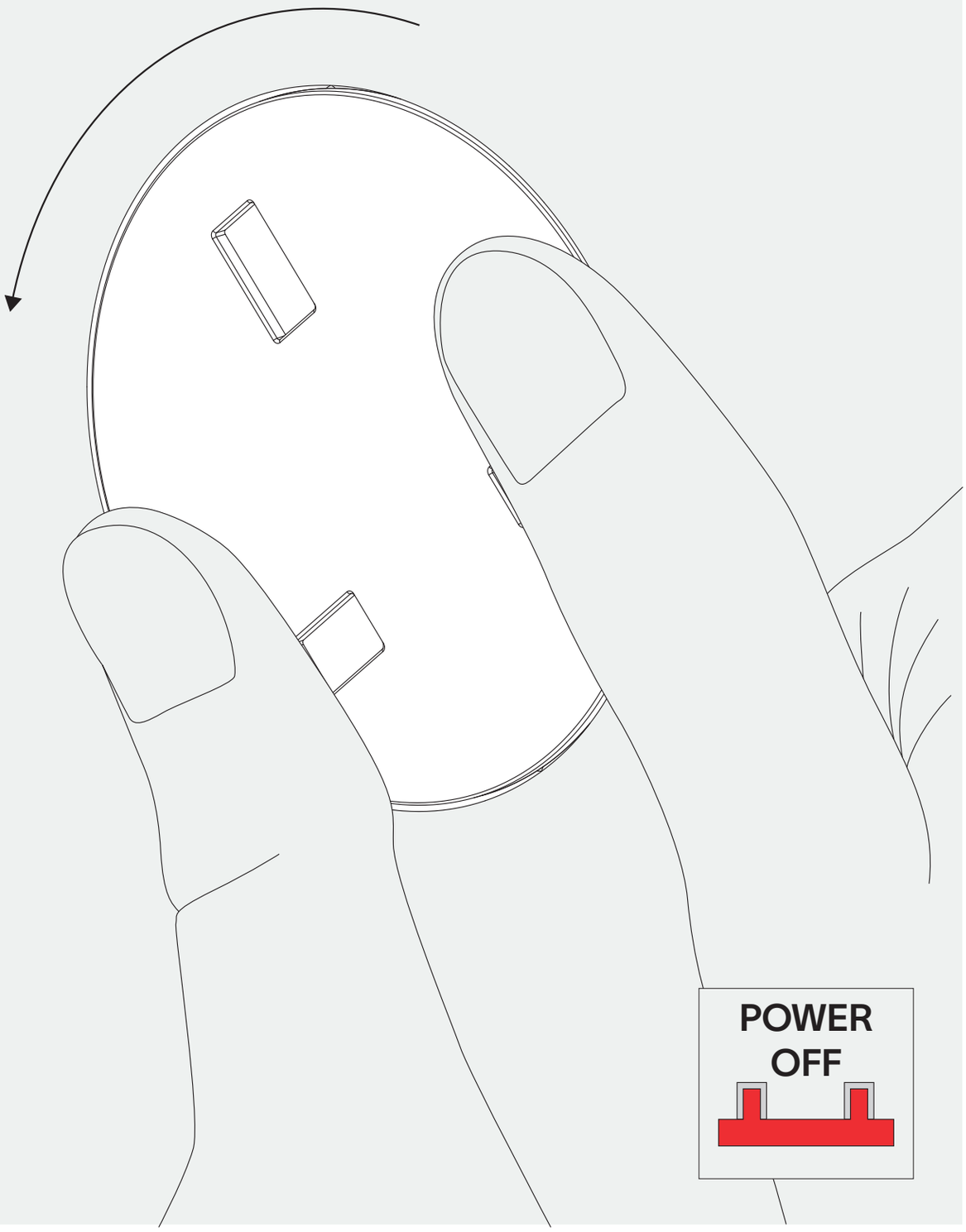

2

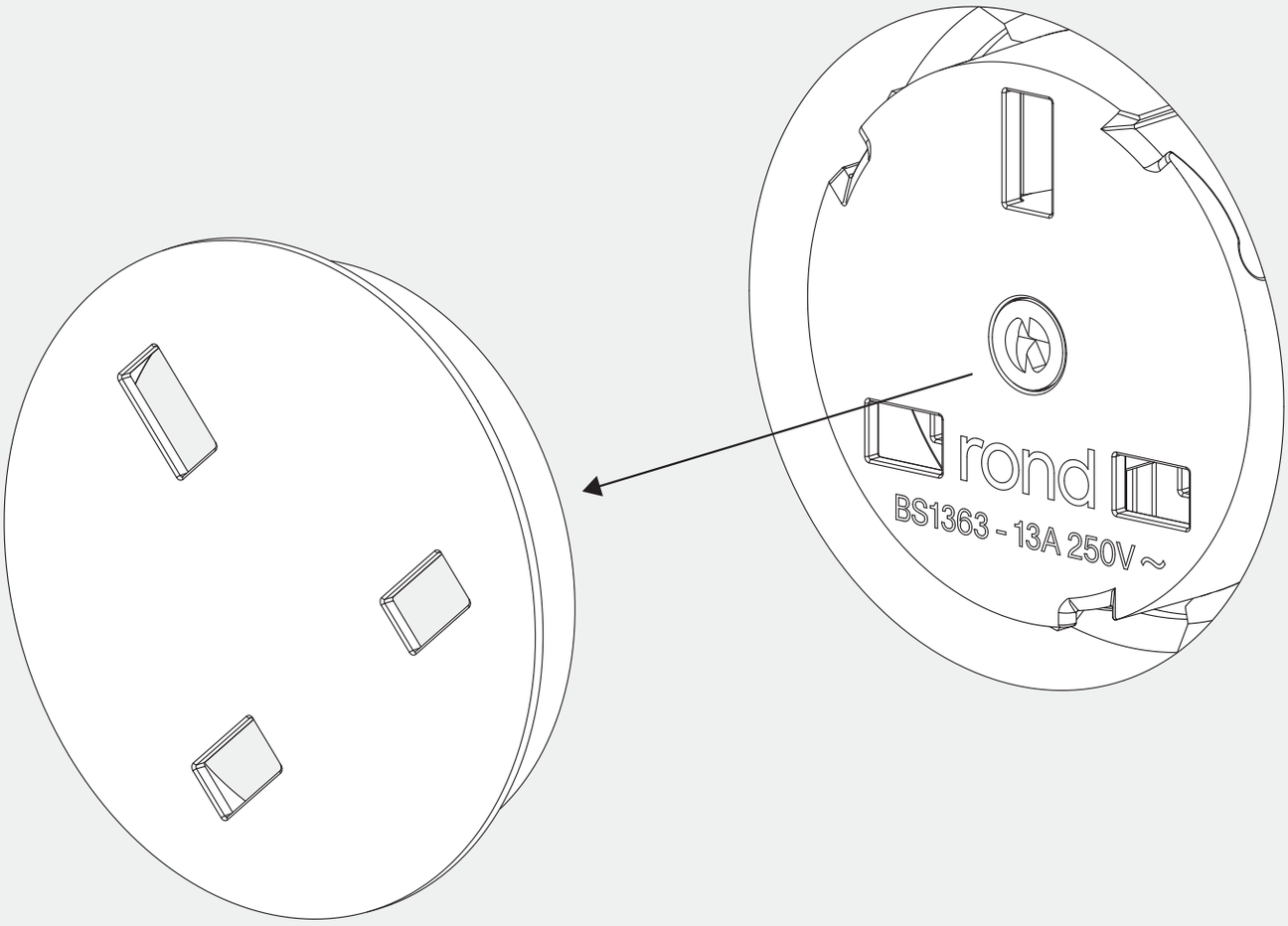

3

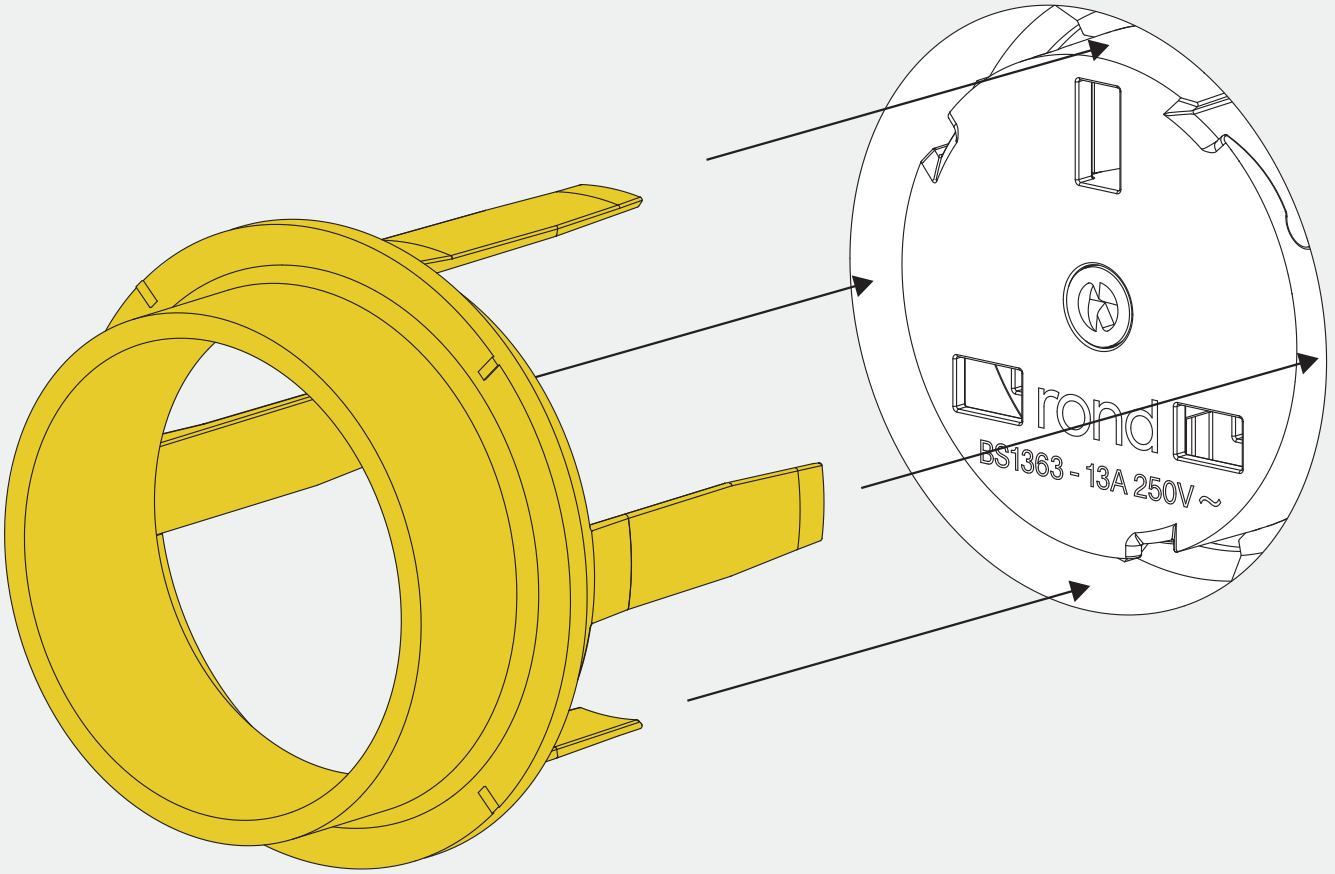

removal tool
8800 - 2010

4

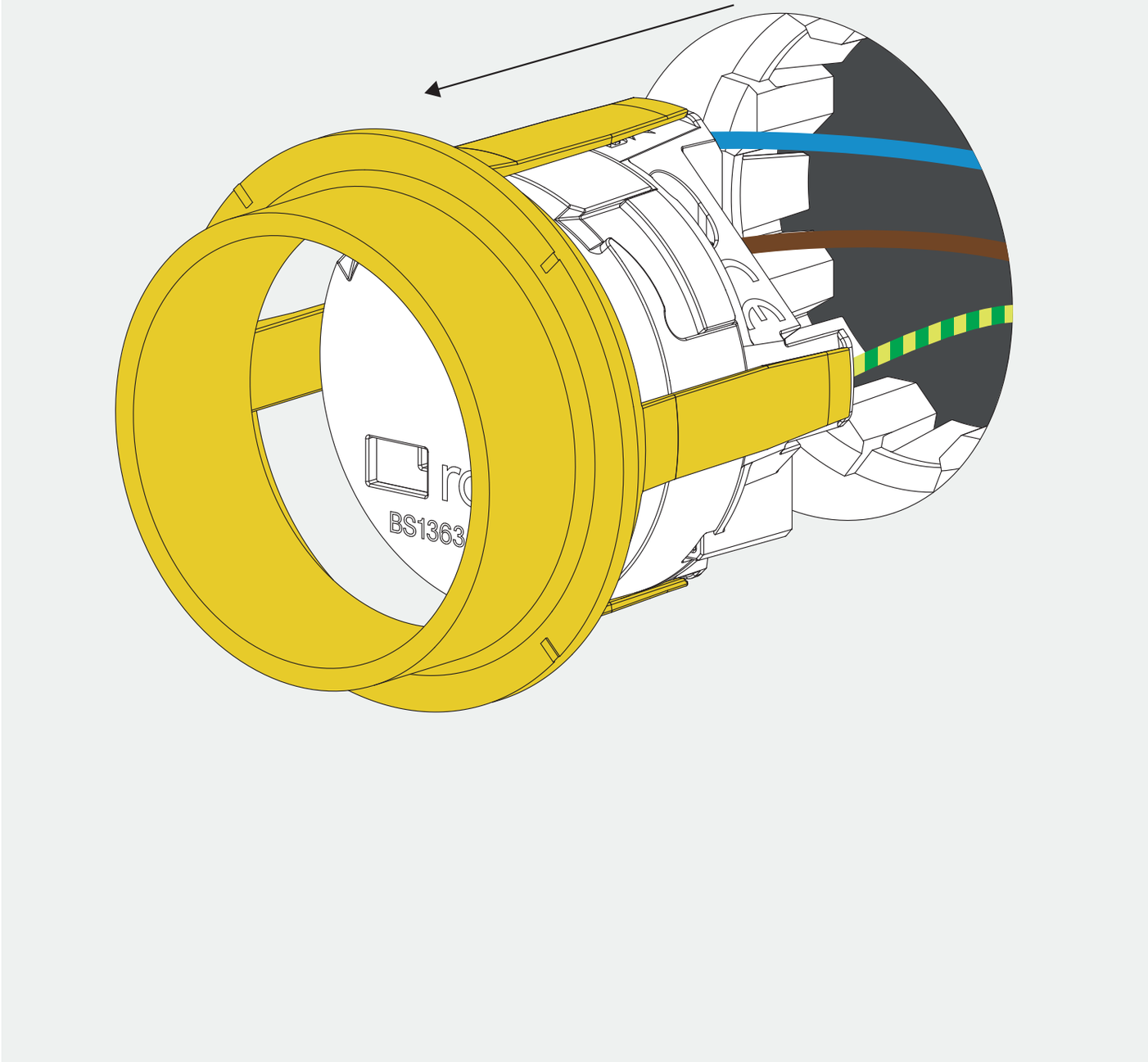

thank you for choosing rond

16 / 250	∿	CE	UK CA	

rond.io

Handelsstraat 19 - 8630 Veurne - Belgium

Installation must be done by skilled professionals only and instructions must be followed at all times. Warranty will not apply in case of wrongful use of if unskilled personnel attempts to repair a product.